ROHS

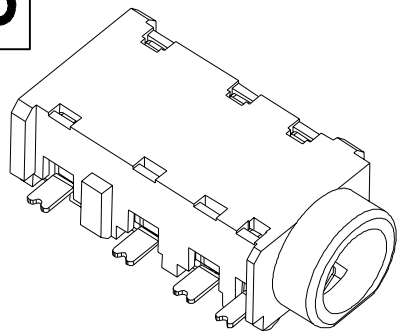

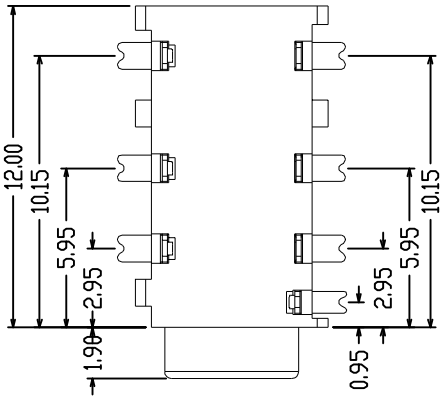

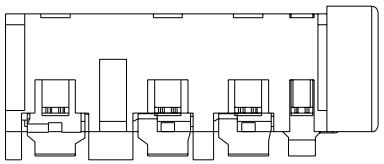

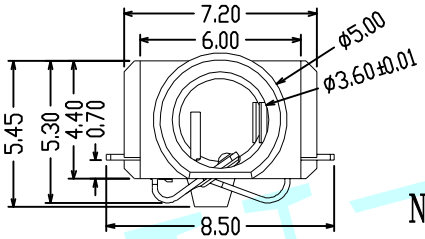

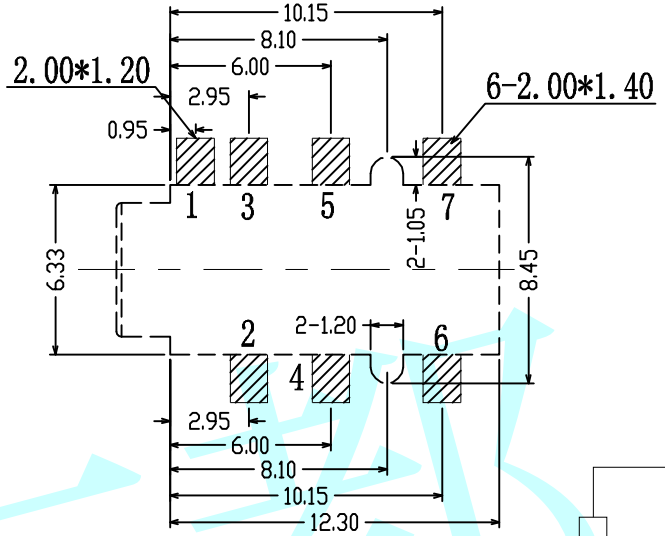

PCB LAYOUT

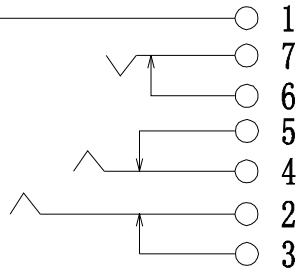

SCHEMATIC

NOTES:

1. Contact current rating:1A
2. Contact resistance:50mΩ max
3. Insulation resistance:1000MΩ min
4. Dielectric withstanding:AC 500V min
5. Connector mating force:29.4N (3kgf) max
6. Connector unmating force:2.94N(0.30kgf) min

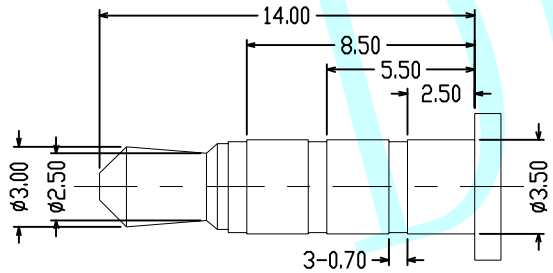

ø3.50mm 4 POLE PLUG DETAIL DRAWING

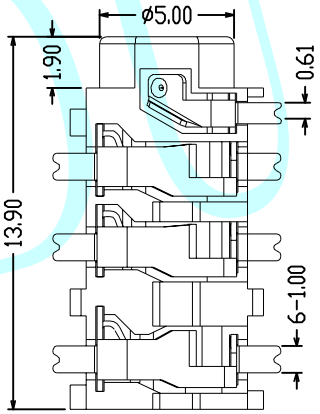

ITEM	PART NAME	Q'TY	MATERIAL	DESCRIPTION	REMARK
4	HOUSING	1	PA9T		Black
3	CONTACT C	3	PHOSPHOR BRONZE T=0.20	Ag Flash	
2	CONTACT B	3	PHOSPHOR BRONZE T=0.20	Ag Flash	
1	CONTACT A	1	PHOSPHOR BRONZE T=0.20	Ag Flash	

APPROVALS		DATE	http://www.dongdudz.com		
DRAW:	ZRD	2023-12-6	TOLERANCE:		ANGLE:
CHECKED:	***	***	30≥	±0.30	±2°
APPOVALS:	***	***	10~30	±0.20	
			5~10	±0.15	
			≤5	±0.10	

® 东都电子
DONGDU ELECTRONICS

MODEL:	PHONE JACKES	
PART NO:	PJ-8318F	
UNIT :mm	SCALE:1:1	
REV:	A	PAGE:1/1

DDU东都