ROHS

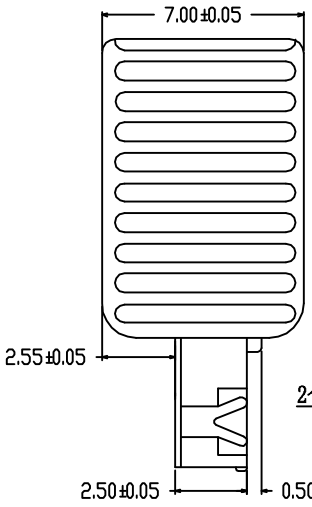

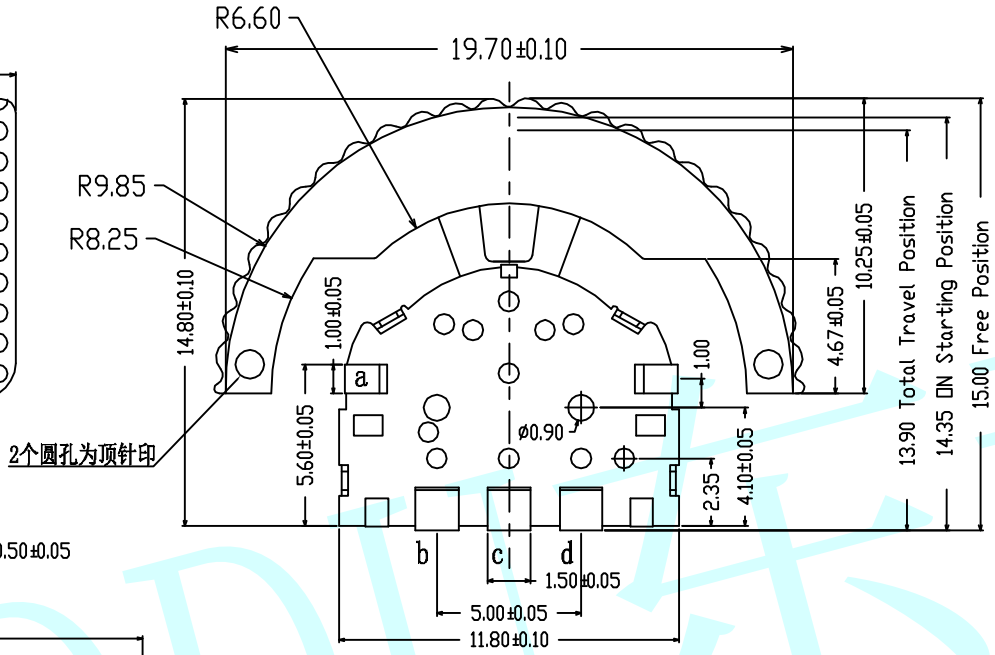

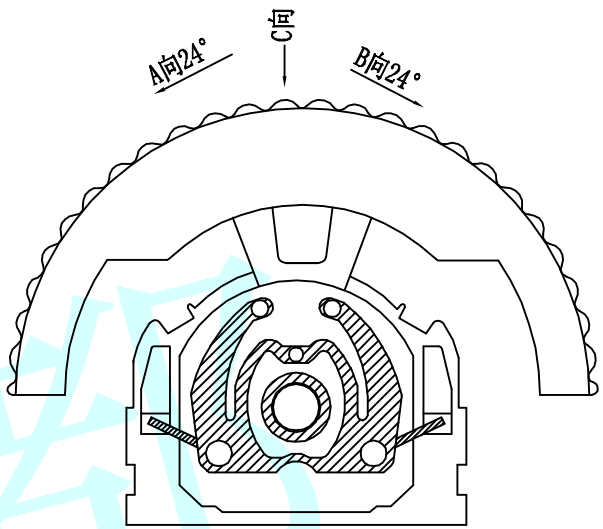

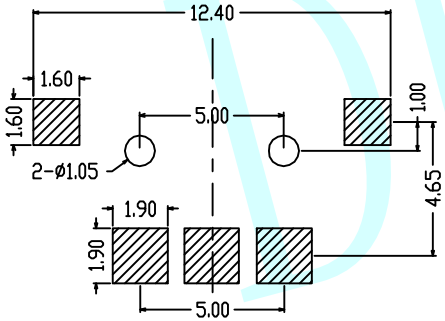

PCB Mounting
Pettern Dimension

NOTES:

1. Rating :DC 5V 10mA
2. Contact Resistance :100mΩ MAX
3. Insulation Resistance :100mΩ MIN
4. Soldering Temper :260±5° /5S
5. Mechanical Life :100,000 Cycles
6. Ever Portion 80±50gf
7. Push Portion 205±80gf
8. Travel :-24° ~ 0° ~ +24°

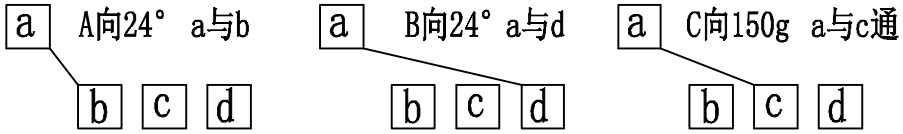

Circuit Diagram

APPROVALS		DATE	http://www.dongdudz.com		
DRAW:	ZRD	2017-12-6	TOLERANCE:		ANGLE:
CHECKED:	***	****	30≥	±0.30	±2°
			10~30	±0.20	
APPOVALS:	***	****	5~10	±0.15	
			≤5	±0.10	

® 东都电子
DONGDU ELECTRONICS

MODEL:	ROCKER SWITCH	
PART NO:	DDU-1224	
UNIT :mm	SCALE:1:1	
REV:	A	PAGE:1/1

DDU东都